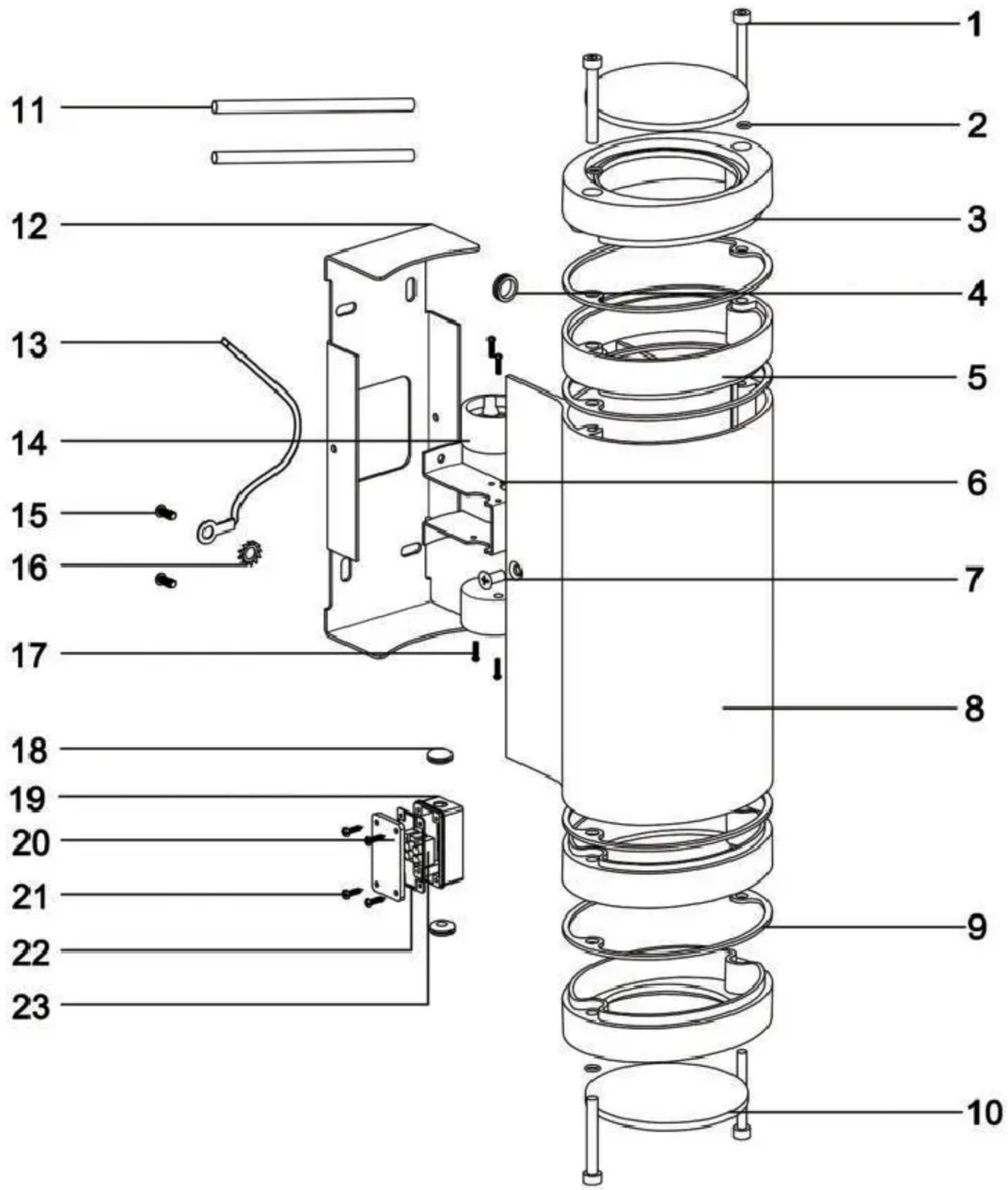

quantity	material	Specification	Name	No.
1	nylon	PA8	Three hole terminal	23
1	silicon	Black	1111 Waterproof box seal ring	22
4	s/s	ST3*10	screw	21
1	PP	Black	1111 Waterproof box cover	20
1	PP	Black	1111 Waterproof box bottom	19
2	silicon	Black	1111 Waterproof box Coil protector	18
4	Galvanized iron	M3*10	screw	17
1	Galvanized iron	ϕ4	Tooth pad	16
2	s/s	M4*8	screw	15
1	porcelain	L=140mm	GU10 lamp holder	14
1	VDE	L=100mm	0.75mm2 yellow/green earthing wire	13
1	A3/galvanized		6005-L Bottom bracket	12
2	ABS	L=100mm	Φ3 Huang la pipe	11
2	thickness 3mm Ø66		Glass	10
4	silicon		6004-L PC sealing ring	9
1	aluminum profile		6005-L Lamp body	8
2	s/s	M4*8	screw	7
1	A3/galvanized		6004-L GU10 Lamp holder bracket	6
1	PC	transparent	6004-L PC COVER	5
1	silicon	Black	Medium coil protector	4
2	ADC12		6004-L lamp cover	3
2	Natural rubber	ϕ4	O-ring	2
4		M3*35	screw	1

design			standardized			Phase marker	quality	proportion	Yuyao Hangjia Electronics Co.,Ltd.
checking									6007-L Explosion Drawing
audit									
process			approval						