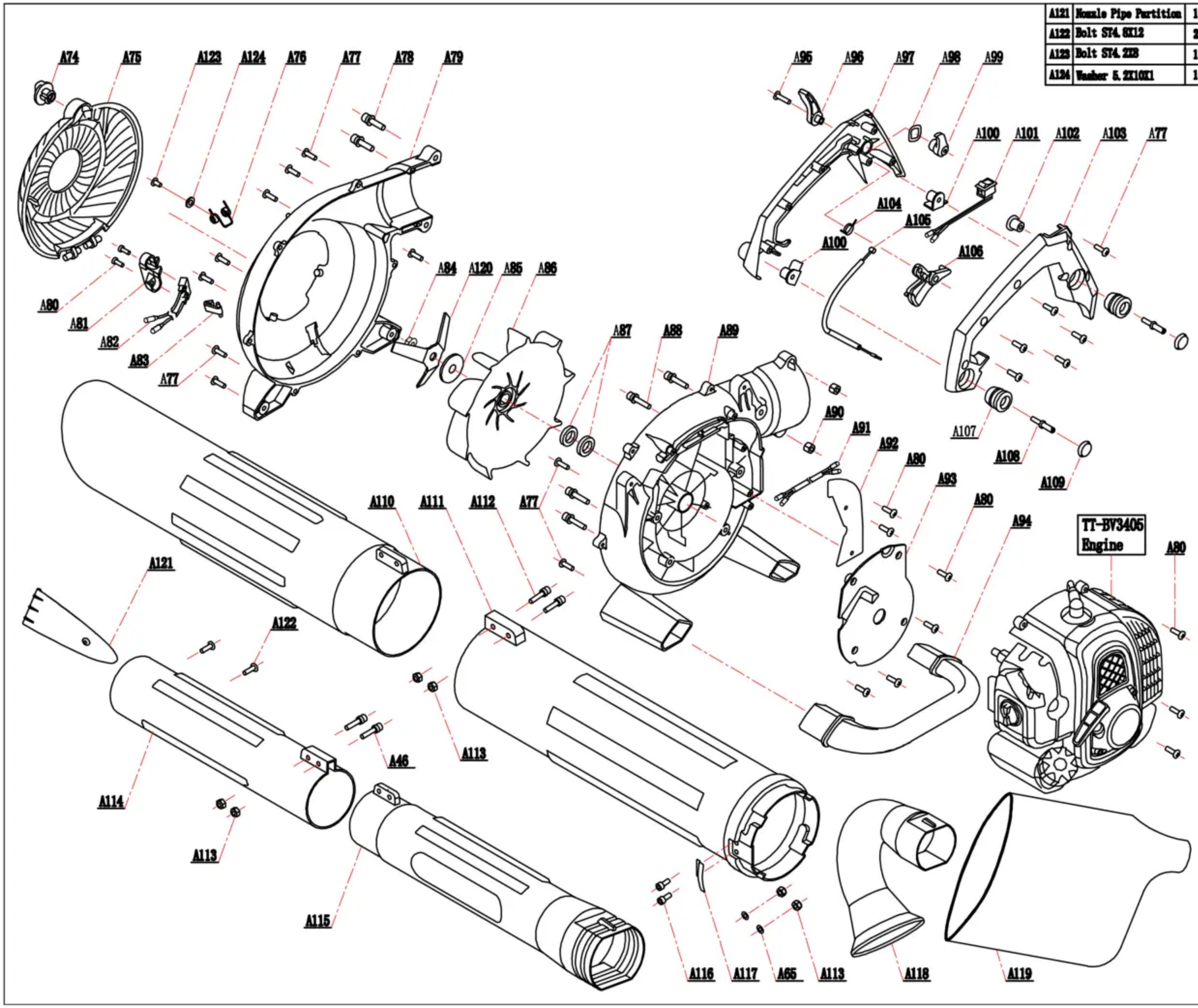

A121	Nozzle Pipe Partition	1	A120	Shredded Blade	1
A122	Bolt ST4.8X12	2	A119	Collection Bag	1
A123	Bolt ST4.2X8	1	A118	Connector Pipe	1
A124	Washer 5.2X10X1	1	A117	Flameout Plate	1
			A116	Bolt M5X12	2
			A115	Blower Nozzle Pipe	1
			A114	Blower Nozzle Pipe	1
			A113	Nut M5	6
			A112	Bolt M6x25	2
			A111	Suction Pipe	1
			A110	Suction Pipe	1
			A109	Dust Proof Cover	2
			A108	Bolt ST4.8X16	2
			A107	Anti-vibration	2
			A106	Trigger	1
			A105	Throttle Lines	1
			A104	Torsion spring Trigger	1
			A103	Right Handle	1
			A102	Anti-vibration	1
			A101	Flameout Switch	1
			A100	Handle Anti-vibration	2
			A99	Self-locking Device	1
			A98	Wave Washer	1
			A97	Left Handle	1
			A96	Self-locking Handle	1
			A95	Bolt ST4.8X20	1
			A94	Handgrip	1
			A93	Back Plate Fan Volute	1
			A92	Heat Insulation Fan Volute	1
			A91	Connection Lines	1
			A90	Nut M6	2
			A89	Fan Volute	1
			A88	Bolt M5x30	4
			A87	Bearing 61802 (15X24X5)	2
			A86	Impeller	1
			A85	Washer 8.5X32X2	1
			A84	Nut M8X1	1
			A83	Rotary Valve	1
			A82	Flameout Switch	1
			A81	Flameout Switch Cover	1
			A80	Bolt ST4.2X12	11
			A79	Fan Volute Cover	1
			A78	Bolt M6x25	2
			A77	Bolt ST4.8X16	16
			A76	Safety Guard Torsion Spring	1
			A75	Fan Cover	1
			A74	Air Filter Fixed Nut	1
			Serial NO	Name	Qty