BOM List for Products

ADEO Ref	845132
EAN Code	3276000546764

Explosion Drawing

unit： mm

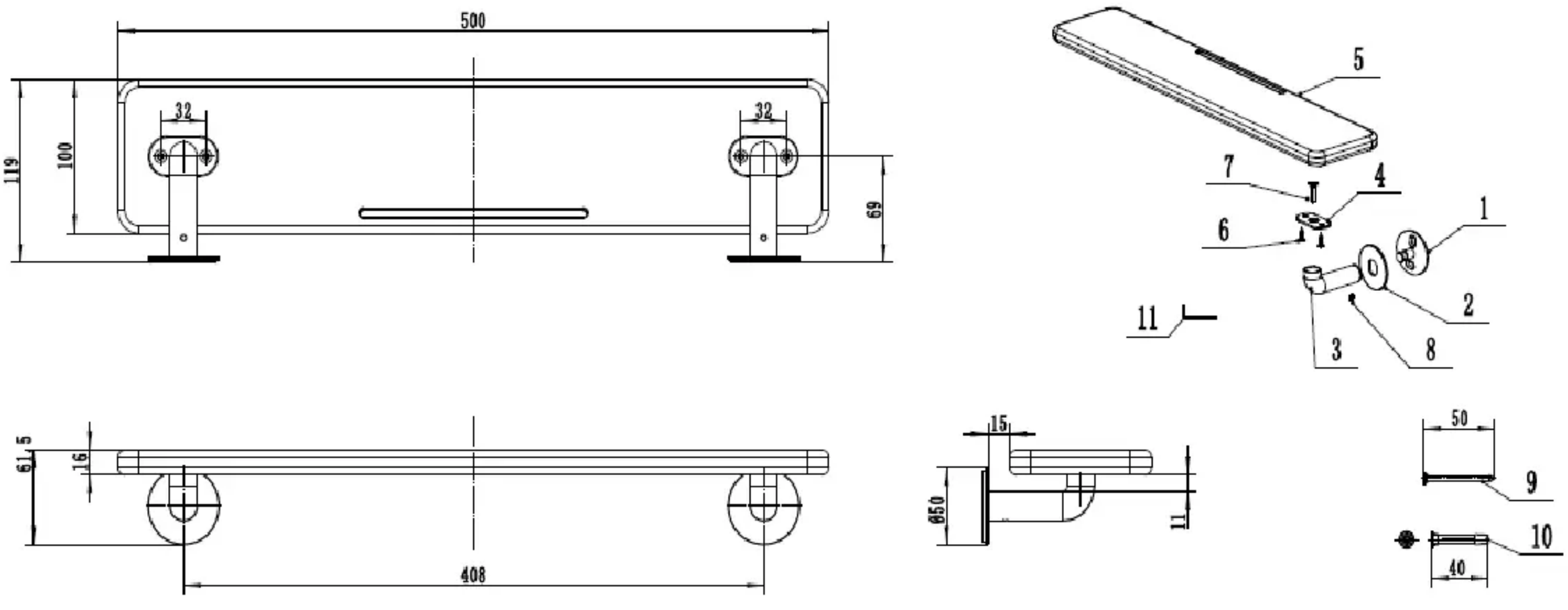

Parts No.	Quantity	Spec	Material & Surface process
1	2		Aluminum alloy with white powder coating
2	2	T=2.0	Steel with white powder coating
3	2		Aluminum alloy with white powder coating
4	2	T=2.0	Steel with white powder coating
5	1		Birch Wood
6	4	ST4.2*13	SS201
7	2	M6*20	SS201
8	2	M5*6	SS201
9	4	4.0*50	SS201
10	4	Φ6*40	plastic
11	1	2.5#	steel with nickel plating