DV-2563-0302-0_Iss3

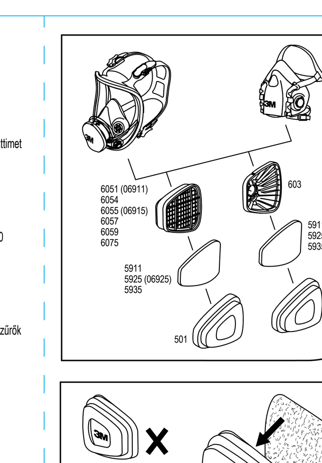

1

2

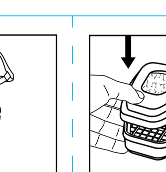

3

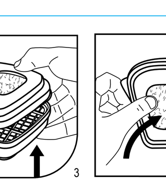

4

(SI) 3M™ filtri serije 5000
(UA) Фільтри 3M™серії 5000
(IL) 5000 מסנני 3M™ מסדרה
(HR) 3M™ 5000 serija filtera
(EE) 3M™ 5000 seeria filtrid
(BG) Филтри серия 3M™ 5000
(LV) 3M™ 5000. sērijas filtri
(RS) 3M™ 5000 Serije Filtera
(LT) 3M 5000 Serijos filtrai
(TR) 3M 5000 Seri Filtreler
(RO) Filtre 3M™ Seria 5000
(KZ) 3M™ фильтрлердің 5000 топтамасы
(RU)(BY)(AZ) Фильтры 3M™ серии 5000
(AU)(NZ) 3M™ 5000 Series Filters

(GB)(IE)(ZA)(AE) 3M™ 5000 Series Filters
(NO) 3M™ 5000 Serien filtre
(FR)(CH)(BE) Filtres 3M™ Série 5000
(FI) 3M™ 5000 -sarjan suodattimet
(DE)(CH)(AT) 3M™ 5000 Filterserie
(PT) Filtros Série 3M™ 5000
(IT)(CH) Filtri 3M™ Serie 5000
(GR) Φίλτρα Σειράς 3M™ 5000
(ES) Filtros 3M™ Serie 5000
(PL) Filtry serii 3M™ 5000
(NL)(BE) 3M™ 5000 Serie Filters
(HU) 3M™ 5000-es sorozatú szűrők
(SE) 3M™ 5000 seriens filter
(CZ) 3M™ Filtry řady5000
(DK) 3M™ 5000 Seriens Filtre
(SK) 3M™ Filtre série 5000

www.3M.EU/Safety

**3M United Kingdom PLC**
3M Centre, Cain Road
Bracknell, RG12 8HT
0870 60 800 60

**3M Ireland**
The Iveagh Building, The Park
Carrickmines, Dublin 18
1 800 320 500

**3M South Africa**
146a Kelvin Drive, Woodmead
Sandton 2128, Johannesburg
+27 11 806 2230

**3M Gulf Ltd.**
P.O. Box 20191
Building 11, Third Floor, Dubai
Internet City, Deira
+ 971 4 367 0777

**3M Egypt Trading Ltd.**
Sofitel Tower, 19th Floor,
Corniche el-Nil St.
Maadi, Cairo
+202 2525 9007

**3M France**
Bd de l'Oise
95006 Cergy Pontoise Cedex
+33 1 30 31 61 61

**3M (Schweiz) AG**
Eggstrasse 93, Postfach
8803 Rüschlikon
+41 1 724 92 21

**3M Belgium bvba/sprl**
Hermeslaan 7
1831 Diegem
+32 2 722 51 11

**3M Deutschland GmbH**
Carl-Schurz-Str. 1
41453 Neuss
+49 2131 14 26 04

**3M Österreich GmbH**
Kranichberggasse 4
1120 Wien
+43 1 86686 0

**3M Italia srl**
Via Norberto Bobbio 21
20096 Pioltello (MI)
+39 02 70351

**3M España,S.A.**
Juan Ignacio Luca de Tena, 19-25
28027 Madrid
+34 91 321 62 81

**3M Nederland B.V.**
Industrieweg 24
2382 NW Zoeterwoude
+31 71 5450365

**3M Svenska AB**
Bollstanäsvägen 3
191 89 Sollentuna
+46 8 92 21 00

**3M (Denmark)**
Hannemanns Allé 53
DK 2300 København S
+45 43480100

**3M Norge AS**
Avd. Verneprodukter
Postboks 100, 2026 Skjetten
Tlf: 06384

**Suomen 3M Oy**
PL 600 (Keilaranta 6)
02151 Espoo
p. +358 9 525 21

**3M Portugal, Lda**
Rua do Conde de Redondo 98
1169-009 Lisboa
+351 21 313 45 00

**3M Hellas MEPE**
Κηφισίας 20,
151 25, Μαρούσι, Αθήνα,
Ελλάδα
+30 210 68 85 300

**3M Poland Sp. z o.o.**
Aleja Katowicka 117, Kajetany K /
Warszawy
05-830 Nadarzyn
+48 22 739 60 00

**3M Hungária Kft.**
1138 Budapest
Váci út 140.
+36 1 270 7713

**3M Česko, s.r.o.**
V Parku 2343/24
148 00 Praha 4
+420 261 380 111

**3M Slovensko s.r.o.**
Vajnorská 142
831 04 Bratislava
+421 2 49 105 230

**3M (East) AG**
Podružnica v Ljubljani
Cesta v Gorice 8, SI-1000
Ljubljana
+386 1 2003 630

**ישראל בע״מ 3M**
רחוב מדינת היהודים 91
ת.ד. 2042 - הרצליה 46120
+972 9 961 5000

**3M Eesti OÜ**
Pärnu mnt. 158
11317 Tallinn
+372 6 115 900

**3M Latvija SIA,**
K. Ulmaņa gatve 5,
Rīga, LV-1004
+371 67 066 120

**3M Lietuva**
A. Goštauto g. 40A
LT-01112 Vilnius
+370 5 216 07 80

**3M România**
Bucharest Business Park, Str.
Menuetului 12, cladirea D, et.3,
013713 Bucuresti
+40 21 2028000

**3M Россия**
121614, Москва, ул.
Крылатская, д. 17, стр. 3, Б.Ц.
«Крылатские Холмы»
+7 495 784 74 74

**3M Belarus Representation Office**
Mogilevskaya str 18, office 4
220007 Minsk
+ 375 172 10 41 85

**3M (East) AG**
"BRIDGE Plaza" 4th floor, 12
Bakikhanov street
Baku AZ 1065
+994 12 404 5050

**3M Україна**
вул. Амосова, 12, 7-ий поверх
03680, Київ, Україна
тел.: +38 044 490 57 77

**3M (EAST) AG PODRUŽNICA RH**
Slavonska avenija 26/7
10000 Zagreb
+385 1 2499 750

**3M България**
Младост 4, бизнес парк София, сграда 4, етаж 2
1766 София, България
тел: 02/9601911, факс 02/9601926

**3M Representation Office Beograd**
Milutina Milankovica 23
11070 Novi Beograd
+381 11 3018459

**3M Turkey**
Sehit Sinan Eroglu Cad. Akel Is Merkezi, No: 6, A Blok
34805 Kavacık / Beykoz/ ISTANBUL-TURKEY
+90 216 538 07 77

**3M Қазақстан ЖШС**
Қазақстан Республикасы, 050051
Алматы қ., «Көктем-2» бизнес-орталығы,
Фонвизин көш 17А, 3-ші қабаты,
тел.: +7 727 333 0000, факс: +7 727 333 0001

**3M Australia Pty Limited**
1 Rivett Road, North Ryde
N.S.W. 2113
+61 (1)800 024 464

**3M New Zealand Limited**
94 Apollo Drive, Rosedale
AUCKLAND 0632, New Zealand
+64 (0)800 364 357

ITA162338/0314 © 3M

## (GB)(IE)(ZA)(AE)

3M™ 5000 Series Filters

Please read these instructions in conjunction with the appropriate 3M™ Filter and 3M™ Facepiece user instruction where you will find information on:-
• Approved combinations of 3M™ filters
• Accessories

## SYSTEM DESCRIPTION

These filters meet the requirements of EN143:2000, Particle Filter(s) and should be used in combination with an approved 3M™ Facepiece to form a filtering apparatus for respiratory protection against certain solid and liquid airborne particles. Filter performance data is detailed in the **Technical Specification**. In addition, the 3M™ 5000 Series particle filters may be used in conjunction with the 3M™ 6000 Series gas and vapour filters. To use with 3M™ 6000 filters, a 3M™ 501 filter retainer is required. Alternatively, the 5000 series filters can be used on their own with a 3M 501 filter retainer, and a 3M™ 603 filter platform. For permitted filter combinations see Fig. 1.

## ⚠ WARNINGS AND LIMITATIONS

### ⚠ WARNING

**• Proper selection, training, use and appropriate maintenance are essential in order for the product to help protect the wearer from certain airborne contaminants. Failure to follow all instructions on the use of these respiratory protection products and/or failure to properly wear the complete product during all periods of exposure may adversely affect the wearer's health, lead to severe or life threatening illness or permanent disability.**

Always be sure that the complete product is:
- Suitable for the application;
- Fitted correctly;
- Worn during all periods of exposure;
- Replaced when necessary.

• For suitability and proper use follow local regulations, refer to all information supplied or contact a safety professional or 3M on 0870 60 800 60 (UK) or 1800 320 500 (Ireland).
• Use this respirator system strictly in accordance with all instructions:
• contained in this booklet
• accompanying other components of the system
• Do not use in concentrations above those specified in the **Technical Specification.**
• Do not use for respiratory protection against atmospheric contaminants/concentrations which are unknown or immediately dangerous to life and health (IDLH).
• Do not use in atmospheres containing less than 19.5% oxygen. (3M definition. Individual countries may apply their own limits on oxygen deficiency. Seek advice if in doubt).
• Only for use by trained, competent personnel.
• Leave the contaminated area immediately if:
a) Any part of the system becomes damaged.
b) Airflow to the facepiece decreases or stops.
c) Breathing becomes difficult or increased breathing resistance occurs.
d) Dizziness or other distress occurs.
e) You smell or taste contaminants or irritation occurs.

These products do not contain components made from natural rubber latex.
National regulations may impose specific limitations on the use of filters depending on the filter class and the facepiece used. Use of any 3M™ Facepiece / Filter combination should be in accordance with applicable Health and Safety standards, Respiratory Selection Tables or on the recommendations of an Occupational Hygienist.
Filters need to be regularly changed. The frequency of change depends on usage time and the concentration of contaminant.
For more information call the 3M Health & Safety Helpline on 0870 60 800 60 (UK) or 1 800 320 500 (Ireland).
Particulate filters must be changed when breathing resistance becomes unacceptable.
Do not use petrol, chlorinated degreasing fluids (such as trichlorethylene), organic solvents or abrasive cleaning agents to clean any part of the equipment.

## NOTE

See all instructions for use and save for continuing reference.

## ASSEMBLY INSTRUCTIONS

1 Place the filter into the 501 retainer so that the printed side will face the gas and vapour filter (fig 2). Check that the filter lies flat. 2 Place the 501 retainer onto the gas and vapour filter, it should lock securely. The filter should completely cover the face of the gas and vapour filter. (fig 3). 3 If using the 3M 5000 Series on its own, fix 603 to the facepiece, place 3M 5000 filter on 603 and clamp the 501 onto the 603 platform. Ensure that the printed side of the filter is facing the 603 platform. 4 Remove to replace filter by lifting on tab as shown (fig 4). These filters are supplied in pairs of identical class and type and must be fitted, used and replaced at the same time (as shown). The effective life of a filter will vary depending on the level of contaminant, work rate, exposure time etc. Particulate filters must be changed when breathing resistance becomes unacceptable. Disposal of parts should be undertaken in accordance with local health and safety and environmental regulations.

## STORAGE AND TRANSPORTATION

These products should be stored in the packaging provided in dry, clean conditions away from direct sunlight, sources of high temperature, petrol and solvent vapours. Store in accordance with manufacturer's instructions, see packaging.

- End of Shelf Life
- Temperature Range
- Maximum Relative Humidity
- Name and address of Manufacturer
- Dispose of in accordance with local regulations

Do not store outside the temperature range -10°C to +50°C or with humidity above 90%. When stored as stated, the expected shelf life of the product is 5 years from date of manufacture.

## EQUIPMENT MARKING

These products are marked to EN 143:2000
R = Reusable

## TECHNICAL SPECIFICATION

| | CLASS | Use for protection against | Maximum use concentration with 3M™ Half mask | Maximum use concentration with 3M™ Full Face mask |
|---|---|---|---|---|
| 3M 5911 | P1 R | Fine particulates | 4 x WEL | 4 x WEL |
| 3M 5925 | P2 R | Fine particulates | 10 x WEL | 10 x WEL |
| 3M 5935 | P3 R | Fine particulates | 20 x WEL | 40 x WEL |

**Assigned Protection Factors are taken from HSE publications. * 3M assigned protection factor**
**WEL = Workplace Exposure Limit**

## APPROVALS

These products meet the requirements of the European Community Directive 89/686/EEC (Personal Protective Equipment Directive) and are thus CE marked.
Certification under Article 10, EC Type-Examination and Article 11, EC Quality Control, has been issued by BSI, Kitemark Court, Davy Avenue, Knowlhill, Milton Keynes, MK5 8PP, UK (Notified body number 0086).

## (DE)(CH)(AT) TECHNISCHE DATEN

| | Klasse | Zum Schutz vor | Maximale Einsatzkonzentration mit 3M™ Halbmasken | Maximale Einsatzkonzentration mit 3M™ Vollmasken |
|---|---|---|---|---|
| 3M 5911 | P1 R | Feinstäube | 4 x AGW | 4 x AGW |
| 3M 5925 | P2 R | Feinstäube | 10 x AGW | 15 x AGW |
| 3M 5935 | P3 R | Feinstäube | 30 x AGW | 400* x AGW |

*3M Empfehlung 200 x AGW (nur für Vollmasken)
*AGW= Arbeitsplatzgrenzwert

## (FR)(CH)(BE) SPECIFICATIONS TECHNIQUES

| | CLASSE | A utiliser pour se protéger de | Concentration d'utilisation maximale avec un demi-masque 3M™ | Concentration d'utilisation maximale avec un masque complet 3M™ |
|---|---|---|---|---|
| 3M 5911 | P1 R | Poussières nocives | 4 x VME / VLB | 4 x VME / VLB |
| 3M 5925 | P2 R | Poussières nocives | 10 x VME / VLB | 10 x VME / VLB |
| 3M 5935 | P3 R | Poussières nocives | 50 x VME / VLB | 200* x VME / VLB |

* Niveau de protection respiratoire 3M
VME: Valeur Moyenne d'Exposition - VLB: Valeur Limite Belge

## (IT)(CH) SPECIFICHE TECNICHE

| | CLASSE | Utilizzo per la protezione contro | Massima concentrazione di utilizzo con semimaschere 3M™ | Massima concentrazione di utilizzo con maschere a pieno facciale 3M™ |
|---|---|---|---|---|
| 3M 5911 | P1 R | Particolato fine | 4 x TLV | 5 x TLV |
| 3M 5925 | P2 R | Particolato fine | 12 x TLV | 16 x TLV |
| 3M 5935 | P3 R | Particolato fine | 48 x TLV | 200* x TLV |

* fattore di protezione assegnato da 3M
*TLV = Threshold limit value - Valore Limite di Soglia

## (ES) ESPECIFICACIONES TÉCNICAS

| | CLASE | Protección frente a | Máxima concentración de uso con Media Máscara 3M™ | Máxima concentración de uso con la Máscara Completa 3M™ |
|---|---|---|---|---|
| 3M 5911 | P1 R | Partículas | 4 x VLA* | 5 x VLA |
| 3M 5925 | P2 R | Partículas | 10 x VLA | 16 x VLA* |
| 3M 5935 | P3 R | Partículas | 50 x VLA | 200* x VLA |

* Factor de protección asignado por 3M
*VLA = Valor Límite Ambiental

## (NL)(BE) TECHNISCHE SPECIFICATIES

| | KLASSE | Gebruik als bescherming tegen | Maximum gebruiksconcentratie met 3M™ Halfgelaatsmasker | Maximum gebruiksconcentratie met 3M™ Volgelaatsmasker |
|---|---|---|---|---|
| 3M 5911 | P1 R | Fijne stofdeeltjes | 4 x WNG | 5 x WNG |
| 3M 5925 | P2 R | Fijne stofdeeltjes | 12 x WNG | 16 x Wettelijke Nederlandse Grenswaarde |
| 3M 5935 | P3 R | Fijne stofdeeltjes | 48 x WNG | 200* x Wettelijke Nederlandse Grenswaarde |

*WNG = Wettelijke Nederlandse Grenswaarde
* door 3M toegewezen beschermingsfactor

## (SE) TEKNISK SPECIFIKATION

| | KLASS | Används som skydd mot | Högsta tillåtna koncentration med 3M™ halvmask | Högsta tillåtna koncentration med 3M™ helmask |
|---|---|---|---|---|
| 3M 5911 | P1 R | Partiklar | 4 x HGV | 5 x HGV |
| 3M 5925 | P2 R | Partiklar | 10 x HGV | 16 x HGV |
| 3M 5935 | P3 R | Partiklar | 50 x HGV | 200* x Hgv |

* 3M-tilldelad skyddsfaktor
*HGV= Hygieniskt gränsvärde.

## (DK) TEKNISKE SPECIFIKATIONER

| | KLASSE | Benyttes til beskyttelse mod | Maksimum brugs koncentration med 3M™ Halvmaske | Maksimum brugs koncentration med 3M™ Helmaske |
|---|---|---|---|---|
| 3M 5911 | P1 R | Partikler | 4 X GV | 5 X TLV |
| 3M 5925 | P2 R | Partikler | 10 X GV | 16 x grænseværdien |
| 3M 5935 | P3 R | Partikler | 50 X GV | 200* x grænseværdien |

* 3M-tildelt beskyttelsesfaktor
* GV = Grænseværdi (maksimalt tilladte gennemsnitskoncentration på en 8-timers arbejdsdag).

## (NO) TEKNISKE SPESIFIKASJONER

| | Klasse | For beskyttelse mot | Maksimal brukskonsentrasjon med 3M™ halvmaske | Maksimal brukskonsentrasjon med 3M™ helmaske |
|---|---|---|---|---|
| 3M 5911 | P1 R | Fine partikler | 4 xTiltaksverdi | 4 xTiltaksverdi |
| 3M 5925 | P2 R | Fine partikler | 10 x Tiltaksverdi | 16 xTiltaksverdi |
| 3M 5935 | P3 R | Fine partikler | 50 x Tiltaksverdi | 200 x Tiltaksverdi |

## (FI) TEKNISET TIEDOT

| | LUOKKA | Suojaa seuraavilta epäpuhtauksilta | Suurin sallittu epäpuhtauspitoisuus 3M™-puolinaamarille | Suurin sallittu epäpuhtauspitoisuus 3M™-kokonaamarille |
|---|---|---|---|---|
| 3M 5911 | P1 R | Hienot hiukkaset | 4 x HTP* | 4 x HTP |
| 3M 5925 | P2 R | Hienot hiukkaset | 10 x HTP | 16 × HTP |
| 3M 5935 | P3 R | Hienot hiukkaset | 50 x HTP | 200* × HTP |

* 3M:n määrittämä suojauskerroin
* HTP = Haitalliseksi tunnettu pitoisuus

## (PT) ESPECIFICAÇÃO TÉCNICA

| | CLASSE | Usar para protecção contra | Concentração máxima de utilização com a meia máscara 3M™ | Concentração máxima de utilização com a máscara completa 3M™ |
|---|---|---|---|---|
| 3M 5911 | P1 R | Partículas Finas | 4 x TLV | New Comment: 5 x TLV |
| 3M 5925 | P2 R | Partículas Finas | 12 x TLV | 16 x TLV |
| 3M 5935 | P3 R | Partículas Finas | 48 x TLV | 200* x TLV |

* Factor de protecção designado pela 3M
*TLV = Valor Limite Umbral

## (GR) ΤΕΧΝΙΚΕΣ ΠΡΟΔΙΑΓΡΑΦΕΣ

| | ΚΑΤΗΓΟΡΙΑ | Χρήση για Προστασία ενάντια | Μέγιστη χρήση συγκεντρώσεων με Μάσκα Μισού Προσώπου 3M™ | Μέγιστη χρήση συγκεντρώσεων με Μάσκα Ολόκληρου Προσώπου 3M™ |
|---|---|---|---|---|
| 3M 5911 | P1 R | Λεπτά Σωματίδια | 4 x TLV | 5 x TLV |
| 3M 5925 | P2 R | Λεπτά Σωματίδια | 12 x TLV | 16 x TLV |
| 3M 5935 | P3 R | Λεπτά Σωματίδια | 48 x TLV | 200* x TLV |

* Συντελεστής προστασίας 3M
*ΕΟΕ = Επιτρεπτό Όριο Έκθεσης

## (PL) SPECYFIKACJA TECHNICZNA

| | KLASA | Używać do ochrony przed | Maksymalne stężenie zanieczyszczeń przy stosowaniu z półmaską 3M™ | Maksymalne stężenie zanieczyszczeń przy stosowaniu z maską pełną 3M™ |
|---|---|---|---|---|
| 3M 5911 | P1 R | Cząstki drobne | 4 x NDS | 5 x NDS |
| 3M 5925 | P2 R | Cząstki drobne | 12 x NDS | 16xNDS |
| 3M 5935 | P3 R | Cząstki drobne | 48 x NDS | 200*xNDS |

* współczynnik ochrony 3M
*NDS = Najwyższe Dopuszczalne Stężenie

## (HU) MŰSZAKI SPECIFIKÁCIÓ

| | Osztály | Védelmet nyújt az alábbiak ellen | Megengedett maximális koncentráció érték 3M™ félálarcokkal | Megengedett maximális koncentráció érték 3M™ teljesálarcokkal |
|---|---|---|---|---|
| 3M 5911 | P1 R | Finom részecskék | 4 x EH* | 5 x EH |
| 3M 5925 | P2 R | Finom részecskék | 12 x EH | 16 x EH |
| 3M 5935 | P3 R | Finom részecskék | 48 x EH | 200* x EH |

* 3M korlátozás
*EH = Expozíciós Határérték

## (CZ) TECHNICKÉ SPECIFIKACE

| | TŘÍDA | Pro použití jako ochrana proti | Nejvyšší přípustná koncentrace při použití s 3M™ polomaskami | Nejvyšší přípustná koncentrace při použití s 3M™ celoobličejovými maskami |
|---|---|---|---|---|
| 3M 5911 | P1 R | Jemné částice | 4 X TLV | 5 X TLV |
| 3M 5925 | P2 R | Jemné částice | 12 X TLV | 16 x TLV |
| 3M 5935 | P3 R | Jemné částice | 48 X TLV | 200* x TLV |

* 3M přidělený ochranný faktor
*PEL = Přípustný expoziční limit

## (SK) TECHNICKÉ ŠPECIFIKÁCIE

| | TRIEDA | Používajte na ochranu proti | Maximálna koncentrácia pri použití s 3M™ polomaskou | Maximálna koncentrácia pri použití s 3M™ celotvárovou maskou |
|---|---|---|---|---|
| 3M 5911 | P1 R | Malé častice | 4 x NPEL | 5 x NPEL |
| 3M 5925 | P2 R | Malé častice | 12 x NPEL | 16 x NPEL |
| 3M 5935 | P3 R | Malé častice | 48 x NPEL | 200* x NPEL |

* ochranný faktor priradený spoločnosťou 3M
*NPEL = Najvyšší prípustný expozičný limit

## (SI) TEHNIČNE SPECIFIKACIJE

| | RAZRED | Za zaščito pred | Maksimalno dopustne koncentracije s 3M™ polmasko | Maksimalno dopustne koncentracije s 3M™ celoobrazno masko |
|---|---|---|---|---|
| 3M 5911 | P1 R | Fini delci | 4 x mejna vrednost | 5 x mejna vrednost |
| 3M 5925 | P2 R | Fini delci | 12 x mejna vrednost | 16 x mejne vrednosti |
| 3M 5935 | P3 R | Fini delci | 48 x mejna vrednost | 200* x mejne vrednosti |

* 3M prizeen zaščitni faktor
*mejna vrednost

## (IL) מפרט טכני

| רמה | | לשימוש כהגנה מפני | ריכוז מירבי בשימוש עם מסכת פנים חצי פנים של 3M | ריכוז מירבי בשימוש עם מסכת פנים מלאה של 3M |
|---|---|---|---|---|
| 3M 5911 | P1 R | חלקיקים זעירים | TLV X 4 | TLV X 5 |
| 3M 5925 | P2 R | חלקיקים זעירים | TLV X 12 | TLV × 16 |
| 3M 5935 | P3 R | חלקיקים זעירים | TLV X 48 | TLV x *200 |

## (EE) TEHNILISED ANDMED

| | KLASS | Kasutage kaitseks järgneva vastu: | Maksimaalne kasutuskontsentratsioon koos 3M™ Poolmaskiga. | Maksimaalne kasutuskontsentratsioon koos 3M™ Täismaskiga. |
|---|---|---|---|---|
| 3M 5911 | P1 R | Peened tolmuosakesed | 4 x LPN | 5 x LPN |
| 3M 5925 | P2 R | Peened tolmuosakesed | 12 x LPN | 16 x LPN |
| 3M 5935 | P3 R | Peened tolmuosakesed | 48 x LPN | 200* x LPN |

* 3M-i määratud kaitsefaktor
*LPN = Lubatud piirnorm

## (LV) TEHNISKĀ SPECIFIKĀCIJA

| | KLASE | Lietot aizsardzībai pret | Maksimālās koncentrācijas, lietojot 3M™ pusmaskas | Maksimālās koncentrācijas, lietojot 3M™ pilnās sejas maskas |
|---|---|---|---|---|
| 3M 5911 | P1 R | Smalkām daļiņām | 4 x AER | 5 x AER |
| 3M 5925 | P2 R | Smalkām daļiņām | 12 x AER | 16 x AER |
| 3M 5935 | P3 R | Smalkām daļiņām | 48 X AER | 200* x AER |

* 3M noziмētais aizsardzības faktors
*AER = arodekspozīcijas robežvērtība

## (LT) TECHNINĖS SPECIFIKACIJOS

| | KLASĖ | Naudojama apsaugai nuo: | Maksimali naudojimo koncentracija su 3M™ Puskauke | Maksimali naudojimo koncentracija su 3M™ Visą veidą dengiančia kauke |
|---|---|---|---|---|
| 3M 5911 | P1 R | Smulkių dalelių | 4 x NRV | 5 x NRV |
| 3M 5925 | P2 R | Smulkių dalelių | 12 x NRV | 16 x NRV |
| 3M 5935 | P3 R | Smulkių dalelių | 48 x NRV | 200* x NRV |

* 3M priskirtas apsaugos koeficientas
*NRV = Neviršytina ribinė vertė

## (RO) SPECIFICATII TEHNICE

| | CLASA | Utilizati pentru protectia impotriva | Concentratia maxima a particulelor in aerul ambiental (MUC) impreuna cu Semimasca 3M™ | Concentratia maxima a particulelor in aerul ambiental (MUC) impreuna cu Masca Integrala 3M™ |
|---|---|---|---|---|
| 3M 5911 | P1 R | Particulelor fine | 4 x VLM | 5 x VLM |
| 3M 5925 | P2 R | Particulelor fine | 12 x VLM | 16 x VLM |
| 3M 5935 | P3 R | Particulelor fine | 48 x VLM | 200* x VLM |

* factorul de protectie atribuit de 3M
*VLM = Valoarea limita maxima

## (RU)(BY)(AZ) ТЕХНИЧЕСКИЕ ХАРАКТЕРИСТИКИ

| | КЛАСС | Использовать для защиты от | Максимально допустимая концентрация с полумаской 3M™ | Максимально допустимая концентрация с полнолицевой маской 3M™ |
|---|---|---|---|---|
| 3M 5911 | P1 R | Мелкодисперсные аэрозоли | 4 ПДК | 5 ПДК |
| 3M 5925 | P2 R | Мелкодисперсные аэрозоли | 12 ПДК | 16 ПДК |
| 3M 5935 | P3 R | Мелкодисперсные аэрозоли | 50 ПДК | 1000* ПДК |

* Данное значение рассчитано в соответствии с требованиями национальных стандартов РФ. Компания 3M рекомендует использовать данную комбинацию при концентрации загрязняющих веществ до 200 ПДК.
ПДК = Предельно допустимая концентрация

## (UA) ТЕХНІЧНІ ХАРАКТЕРИСТИКИ

| | Клас захисту | Використовувати для захисту від | Максимальна концентрація для використання з 3M™ напівмаски | Максимальна концентрація для використання з 3M™ повної маски |
|---|---|---|---|---|
| 3M 5911 | P1 R | Дрібнодисперсні частки | 4 x ГДК | 5 x ГДК |
| 3M 5925 | P2 R | Дрібнодисперсні частки | 12 x ГДК | 16 x ГДК |
| 3M 5935 | P3 R | Дрібнодисперсні частки | 48 x ГДК | 200* x ГДК |

* Коефіцієнт захисту, встановлений 3M
*ГДК = Гранично допустима концентрація

## (HR) Tehnička specifikacija

| | KLASA | Koristiti za zaštitu za | Maksimalna koncentracija pri upotrebi 3M™ polu-maske | Maksimalna koncentracija pri upotrebi 3M™ pune maske |
|---|---|---|---|---|
| 3M 5911 | P1 R | fine čestice | 4 x MDK (Maksimalna dozvoljena koncentracija) | 5 x MDK (Maksimalna dozvoljena koncentracija) |
| 3M 5925 | P2 R | fine čestice | 12 x MDK (Maksimalna dozvoljena koncentracija) | 16 x TLV (MDK,maksimalno dozvoljena koncentracija) |
| 3M 5935 | P3 R | fine čestice | 48 x MDK (Maksimalna dozvoljena koncentracija) | 200* x TLV (MDK,maksimalno dozvoljena koncentracija) |

* 3M označeni faktor zaštite
*TLV = granična vrednost ( MDK-maksimalna dozvoljena koncentracija)

## (BG) ТЕХНИЧЕСКА СПЕЦИФИКАЦИЯ

| | КЛАС | Да се използва за защита от | Максимална концентрация на използване с 3M™ полу маска | Максимална концентрация на използване с 3M™ цяла лицева маска |
|---|---|---|---|---|
| 3M 5911 | P1 R | Фини частици | 4 x ГС | 5 x ГС |
| 3M 5925 | P2 R | Фини частици | 12 x ГС | 16 x ГС |
| 3M 5935 | P3 R | Фини частици | 48 x ГС | 200* x ГС |

* Определен фактор на защита
*ГС= Гранична стойност

## (RS) TEHNIČKA SPECIFIKACIJA

| | KLASA | Koristiti za zaštitu protiv | Maksimalna upotreba koncentrata sa 3M™ Polumaskom | Maksimalna upotreba koncentrata sa 3M™ Punom maskom za lice |
|---|---|---|---|---|
| 3M 5911 | P1 R | Fine čestice | 4 x TLV | 5 x TLV |
| 3M 5925 | P2 R | Fine čestice | 12 x TLV | 16 x TLV |
| 3M 5935 | P3 R | Fine čestice | 48 x TLV | 200* x TLV |

* 3M dodijeljeni zaštitni faktor
*TLV = granična vrijednost

## (TR) TEKNİK ÖZELLİKLER

| | SINIF | ...karşı koruma için kullanım | 3M™ Yarım Maske ile maksimum kullanım konsantrasyonu | 3M™ Tam Yüz Maske ile maksimum kullanım konsantrasyonu |
|---|---|---|---|---|
| 3M 5911 | P1 R | İnce partiküller | 4 x ESD | 5 x ESD |
| 3M 5925 | P2 R | İnce partiküller | 12 x ESD | 16 x TLV |
| 3M 5935 | P3 R | İnce partiküller | 48 x ESD | 200 x TLV |

* 3M atanmış koruma faktörü
*ESD (TLV )=Eşik Sınır Değer
Sadece HSE public için

## (KZ) ТЕХНИКАЛЫҚ СПЕЦИФИКАЦИЯ

| | Класс | Қорғауға арналған | Жоғарғы қоспада 3M™ жарым пердені пайдалану | Жоғарғы қоспада 3M™ шлем-пердесін пайдалану |
|---|---|---|---|---|
| 3M 5911 | P1 R | ұсақ бөлшектер | 4 x МШҚ* | 5 x TLV |
| 3M 5925 | P2 R | ұсақ бөлшектер | 12 x TLV | 16 x МШҚ* |
| 3M 5935 | P3 R | ұсақ бөлшектер | 48 x TLV | 200* x МШҚ* |

* 3M фильтрінің қорғауға арналған құрылғы
*МШҚ = Мүмкіндік Шекті Концентрациясы

## (AU)(NZ)

3M™ 5000 Series Filters

Please read these instructions in conjunction with the appropriate 3M™ Filter and 3M™ Face piece user instruction where you will find information on:-
• Approved combinations of 3M™ filters
• Accessories

## SYSTEM DESCRIPTION

These filters meet the requirements of EN143:2000, Particle Filter(s) and AS/NZS 1716:2012 and should be used in combination with an approved 3M™ Face piece to form a filtering apparatus for respiratory protection against certain solid and liquid airborne particles. Filter Performance data is detailed in the **Technical Specification**. In addition, the 3M™ 5000 Series particulate filters may be used in conjunction with the3M™ 6000 Series gas and vapour filters. To use with 3M™ 6000 filters, a 3M™ 501 filter retainer is required. Alternatively, the 5000 series filters can be used on their own,with a 3M 501 filter retainer, and a 3M™ 603 filter platform. For permitted filter combinations see Fig. 1.

## ⚠ WARNINGS AND LIMITATIONS

### ⚠ WARNING

**• Proper selection, training, use and appropriate maintenance are essential in order for the product to help protect the wearer from certain airborne contaminants. Failure to follow all instructions on the use of these respiratory protection products and/or failure to properly wear the complete product during all periods of exposure may adversely affect the wearer's health, lead to severe or life threatening illness or permanent disability.**

Always be sure that the complete product is:
- Suitable for the application;
- Fitted correctly;
- Worn during all periods of exposure;
- Replaced when necessary.

• For suitability and proper use follow local regulations, refer to all information supplied or contact an occupational hygienist, safety professional or 3M representative on the Tech Assist Helpline 3M Australia 1800 024 464, 3M New Zealand 0800 364 357.
• Use this respirator system strictly in accordance with all instructions:
• - contained in this booklet,
• - accompanying other components of the system.
• Do not use in concentrations above those specified in **Technical Specification.**
• Do not use for respiratory protection against atmospheric contaminants/concentrations which are unknown or immediately dangerous to life and health (IDLH).
• Do not use in atmospheres containing less than 19.5% oxygen. (3M definition. Individual countries may apply their own limits on oxygen deficiency. Seek advice if in doubt).
• Only for use by trained, competent personnel.
• Leave the contaminated area immediately if:
a) Any part of the system becomes damaged.
b) Airflow to the face piece decreases or stops.
c) Breathing becomes difficult or increased breathing resistance occurs.
d) Dizziness or other distress occurs.
e) You smell or taste contaminants or irritation occurs.

These products do not contain components made from natural rubber latex.
National regulations may impose specific limitations on the use of filters depending on the filter class and the facepiece used. Use of any 3M™ Face piece / Filter combination should be in accordance with applicable Health and Safety standards, AS/NZS 1715, Respiratory Selection Tables or in accordance with the recommendations of an Occupational Hygienist.
Filters need to be regularly changed. The frequency of change depends on usage time and the concentration of contaminant.
For more information call the 3M Tech Assist Help Line 3M Australia 1800 024 464, 3M New Zealand 0800 364 357.
Particulate filters must be changed when breathing resistance becomes unacceptable.
Do not use petrol, chlorinated degreasing fluids (such as trichlorethylene), organic solvents or abrasive cleaning agents to clean any part of the equipment.

## NOTE

See all instructions for use and save for continuing reference.

## ASSEMBLY INSTRUCTIONS

1 Place the filter into the 501 retainer so that the printed side will face the gas and vapour filter (fig 2). Check that the filter lies flat. 2 Place the 501 retainer onto the gas and vapour filter, it should lock securely. The filter should completely cover the face of the gas and vapour filter. (fig 3). 3 If using the 3M 5000 Series on its own, fix 603 to the facepiece, place 3M 5000 filter on 603 and clamp the 501 onto the 603 platform. Ensure that the printed side of the filter is facing the 603 platform. 4 Remove to replace filter by lifting on TAB as shown (fig 4). These filters are supplied in pairs of identical class and type and must be fitted, used and replaced at the same time (as shown). The effective life of a filter will vary depending on the level of contaminant, work rate, exposure time etc. Particulate filters must be changed when breathing resistance becomes unacceptable. Disposal of parts should be undertaken in accordance with local health and safety and environmental regulations.

## STORAGE AND TRANSPORTATION

These products should be stored in the packaging provided in dry, clean conditions away from direct sunlight, sources of high temperature, petrol and solvent vapours. Store in accordance with manufacturer's instructions, see packaging.

- End of Shelf Life
- Temperature Range
- Maximum Relative Humidity
- Name and address of Manufacturer
- Dispose in accordance with local regulations

Do not store outside the temperature range -10°C to +50°C or with humidity above 90%. When stored as stated, the expected shelf life of the 605X, 6075 and 609X products is 5 years from date of manufacture.

## EQUIPMENT MARKING

These products are marked to EN 143:2000 and AS/NZS1716
R = Re-usable
These filters have been produced to comply with the requirements of the Australian /New Zealand Standard AS/NZS 1716 under an agreed production certification scheme operated during manufacture in accordance with the SAI Global StandardsMark programme.

## TECHNICAL SPECIFICATION

| | CLASS | Use for protection against | Maximum use concentration with 3M™ Half mask | Maximum use concentration with 3M™ Full Face mask |
|---|---|---|---|---|
| 3M 5911 | P1 R | Mechanically and Thermally generated particulates | 10 x ES | 10 x ES |
| 3M 5925 | P2 R | Mechanically and Thermally generated particulates | 10 x ES | 50 x ES* |
| 3M 5935 | P3 R | Mechanically and Thermally generated particulates | 10 x ES | Up to 100* x ES |

***AS/NZS 1715 Required Minimum Protection Factor**
***ES = Exposure Standard**

## APPROVALS

These products meet the requirements of the European Community Directive 89/686/EEC (Personal Protective Equipment Directive) and are thus CE marked.
Certification under Article 10, EC Type-Examination and Article 11, EC Quality Control, has been issued by BSI, Kitemark Court, Davy Avenue, Knowlhill, Milton Keynes, MK5 8PP, UK (Notified body number 0086).

708mm / 27.87"

118mm

72.42 mm

507mm / 19.96"

| | | | |
|---|---|---|---|
| **Description:** PSD - Particulate Filter - 5000 - UI - SLG | **Job No:** 162338 | **File No:** 64192 | Itarus House, Tenter Road, Moulton Park, Northampton NN3 6PZ |
| **FG Stock No.:** n/a | **Rev. Date:** 15/05/2014 | **Rev. Time:** 15:30 | Need help? Contact us: +44 (0)1604 468100 |
| **Pkg Spec No.:** DV-2563-0302-0_Iss3 **Pkg Structure No.:** n/a | **Operator:** 1 | **Asset ID:** 9978 | mail@itarus.com www.itarus.com |
| **Barcode No:** n/a **Size/BWR:** n/a | **Process:** Litho | UIC 3RywYc | |
| **Dimensions:** 507mm x 708mm / 19.96" x 27.87" | 3 0 0 Version Regions Itarus | | |
| **Folded Size:** 72.42mm x 118mm / 2.86" x 4.64" | | | |
| **File name:** O-AICS4-MAC10-DV-2563-0302-0_Iss3.ai | | | |

Wedges: 2% 40% 80% 25% 50% 75% 15° 150#

**Colours:** 1
1 Black

TECHNICAL DRAWING

**ALL TEXT AND STYLE MAPPING USED IN THIS DOCUMENT HAS BEEN EXTRACTED FROM APPROVED TEXT IN TEXTURES.**

**PLEASE MAKE ANY AMENDMENTS TO THIS DOCUMENT USING TEXTURES AND ADD A COMMENT TO THE ARA ASSET, TO SAY THIS HAS BEEN DONE. THE DOCUMENT WILL THEN BE RE-MERGED.**